Daily CNG

LIGHT RANGE



IVECO

DAILY CNG POWERED RANGE : THE REAL ALTERNATIVE

Daily CNG is Iveco's tried and tested solution for low pollution transport.

Fully developed and manufactured in-house to give you the confidence to choose a vehicle which not only has very low emissions but also helps to keep fossil fuels in the ground by tapping into a plentiful alternative energy source: NATURAL GAS. Thus with CNG - Compressed Natural Gas - you are contributing to the environment twice over!

Daily CNG is now in its second generation and it has been further developed learning from experiences gained from a 5 years service history.

The Daily CNG power unit blends the durability of a diesel with the refinement of a car. And you are guaranteed the reliability of the Iveco Daily, Europe's most popular van!

Daily CNG is certified to EEV emission standards, an even higher standard than Euro 5.

Daily CNG's outstandingly low emissions make it eligible for the maximum available "Powershift grant" towards its cost.

The pollutants

NOx. Oxides of Nitrogen include nitrogen dioxide, nitric oxide and nitrous oxide and result from chemical reactions of nitrogen and oxygen during the combustion process.

Pm. Particulate matter resulting from incomplete combustion. Will be largely carbon based with sulphate, nitrate and metallic components mixed with complex hydro carbon components.

CH_4. Methane is a gas with an extremely high global warming potential. It is measured specifically for ETC tests.

CO. Carbon monoxide resulting from only partial combustion of the hydro carbon based fuel.

HC. Unburned hydro carbons resulting from fuel and lubricating oil present in the combustion chamber. Combustion is incomplete due to adverse thermal and fuel / air mixing conditions.

NMHC. Non methane hydro carbons represent the balance of total HC after accounting for the methane. It is measured specifically for ETC tests.

Pollutant Limits(g/kWh)	Test	CO	HC	NMH	CH_4	NOx	Pm
Euro 3 2001(R)	(ESC) (ETC)	2.10 5.45	0.66	0.78	1.60	5.0 5.0	0.10 / 0.13 0.16 / 0.21
Euro 4 2006(R)	(ESC) (ETC)	1.50 4.00	0.46	0.55	1.10	3.5 3.5	0.02 0.03
Euro 5 2009(R)	(ESC) (ETC)	1.50 4.00	0.46	0.55	1.10	2.0 2.0	0.02 0.03
EEV	(ESC) (ETC)	1.50 3.00	0.25	0.40	0.65	2.0 2.0	0.02 0.02

Note:

ESC means European Steady State Cycle and is the engine certification test cycle applicable to Diesel engines not having advanced exhaust after-treatment.

ETC means European Transient Cycle and is the engine certification test cycle applicable to all gaseous fuelled engines and Diesel engines employing advanced exhaust after-treatment.

The double limit for particulate matter for Euro 3 provides for an increased limit for small (< 0.7 L/cyl) Diesel engines.

Alternative fuels

Gasoline, LPG and Diesel fuel are obtained by refining crude oil. An alternative fuel can be considered as a fuel obtained from another source thereby making road vehicles less dependant on a single fuel source. Additionally, alternative fuels should offer the possibility to reduce pollution caused by vehicle exhaust emissions. It is worthwhile to note here that exhaust emissions result from the combination of the fuel chemistry, the engine combustion technology and any exhaust after treatment.

There are many variations of alternative fuels to consider, some naturally occurring such as Natural Gas and others which are manufactured such as alcohol based or esterised vegetable oils such as biodiesel. These will be used either in Diesel engines when their self ignition temperature is appropriate or spark ignition engines. The latter brings additional benefits in terms of vehicle noise.

In the long term, Hydrogen is likely to be the appropriate fuel for road vehicles. This can be used with fuel cells to provide hybrid vehicles or used with spark ignition engines; in either case, free of CO_2 emissions.

For today, the IVECO choice for an alternative fuel is Natural Gas which is a logical choice, giving the potential for very low exhaust emissions and providing a pathway for the eventual hydrogen fuel storage system and distribution system for road vehicles.

Why natural gas?

The emission of not only the regulated emissions but CO_2 is also important for road vehicles.

Natural Gas is predominantly methane (CH_4) which is the simplest of the hydro carbon fuels. In the long term, the preferred fuel will be hydrogen and its combustion will be free of CO_2 emissions.

The technologies used for Natural Gas storage on board the vehicle will form development paths for hydrogen in the long term.

- Regarding CO_2 emission, the fuel chemistry gives an indication of the emission potential.
- Natural Gas is predominantly (c90%) methane (CH_4) containing 25% hydrogen by mass.

By comparison,

- Gasoline (approx $CH_{1,85}$) contains 13.4% hydrogen
- Diesel (approx $CH_{1,85}$) contains 13.4% hydrogen
- LPG (liquefied Petroleum Gas approx $CH_{2,525}$) contains 17.4% hydrogen.

WHY DAILY CNG?

High reliability

The development of the engine is derived from the Iveco Diesel version with just a few modifications, including:

- Otto cycle configuration
- Multipoint Injection System (MPI)
- Compression ratio 12.2/ 1
- Specific cylinder head
- Spark plugs
- Special pistons
- 3- way catalitic converter
- Stoichometric combustion: lambda = 1

Operative benefits

- High engine performance for the best driveability in stop and go operation
- Low gaseous emissions
- Environmentally friendly
- Fuel cost savings
- Low vehicle noise

Natural Gas is Safe

The natural gas is lighter than the air with consequently easy dispersion in the atmosphere in case of losses. The tanks are designed to resist thermal stress and shocks. As a consequence there is no danger with tunnels and pits in service workshops.

FUEL CONSUMPTION EFFECTS

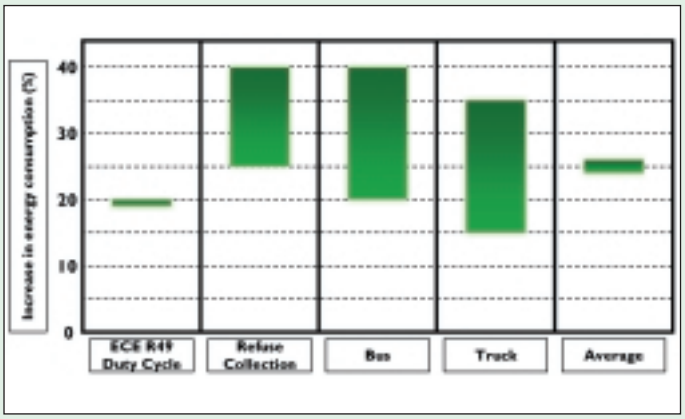

The gas engine is a throttled engine and it has a lower compression ratio than the equivalent Diesel engine. Therefore, the thermal efficiency of the gas engine is lower than the equivalent Diesel engine. The diagram shows that about 20% more energy is required to conduct a 13-mode steady state test. Relating this to specific vehicle missions, the actual increase in energy required is very much mission dependant.

In the case of a refuse collection vehicle, a city centre application where the engine is continually operating at light engine load means that the energy required to complete the mission is, perhaps, 40% higher than the equivalent Diesel.

A similar vehicle operating in a rural area would behave more like a conventional van and the energy requirements could be only 25% higher. In general, it could be said that, on average, a natural gas engine requires 25% more energy consumption than an equivalent Diesel engine.



In order to evaluate the actual fuel cost, it is necessary to complete the following analysis:

		Diesel	Gas
Lower heating value	(MJ/kg)	42.5	47.7
Average Energy Conservation	(MJ)	100	125
Mass of Fuel Required	(kg)	2.35	2.62
Fuel Cost (less VAT)	(£/litre)	0.62	
Fuel Cost (less VAT)	(£/kg)	0.75	0.49
Cost of Fuel Mass Above		1.76	1.28
Comparitive Fuel Cost		£1.00	£0.73

Following the analysis through, if the cost of Diesel fuel is £0.62/Litre and natural gas costs £0.49/kg (pre VAT) then **every £1 spent on Diesel fuel will mean £0.73 spent on gas. In other words, a fuel cost saving of 27%** in this example.

CNG TANKS LAYOUT

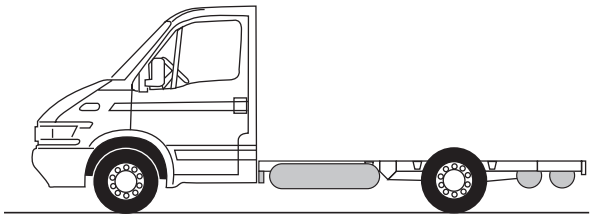

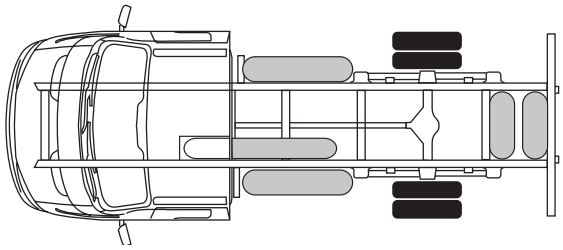

Fuel tanks

- Nr. 5 steel tanks (tot. 220 lt.)
  - nr 2; 28 lt.
  - nr 2; 54 lt.
  - nr 1; 56 lt.
- Opt 7823 "capacity increased" additional 30 lt.
- Filler point on the cab "B" pillar
- Range: Approx 150 miles

ENGINE TECHNOLOGY

In order to achieve very low exhaust emissions, the IVECO engine strategy is as follows:

- Stoichiometric combustion system with three-way catalyst
- Multi-point sequential fuel injection system.
- Individual spark plug - ignition coil assemblies
- Differential piston pressure reduction system

IVECO engine result:

NOx	CO	CH_4	NMHC	Pm
0.69	**1.4**	**0.17**	**0.05**	**0.01**
Memo; EEV limits				
2.00	3.0	0.65	0.40	0.02

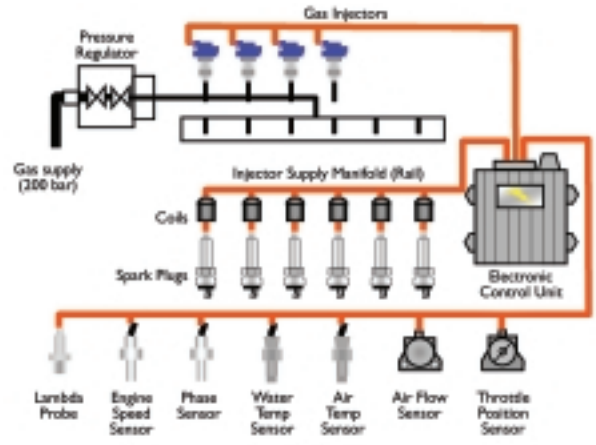

VEHICLE WEIGHTS

Van

Model	Wb (mm)	GVW (kg)	Axle Plating		Kerbweight			PAYLOAD (KG)
			FRONT (kg)	REAR (kg)	TOT. (kg)	FRONT (kg)	REAR (kg)	
STANDARD CAPACITY								
35S11GV	3300		1650	2240	2430	1255	1175	1070
35C11GV	3300	3500	1900	2600	2585	1325	1260	915
	3950				2765	1405	1360	735
40C11GV	3300	4200		3100	2595	1325	1270	1605
	3950				2775	1405	1370	1425
50C11GV	3300	5200		3700	2685	1375	1310	2515
	3950				2880	1475	1405	2320

Chassis Cab

Model	Wb (mm)	GVW (kg)	Axle Plating		Kerbweight			PAYLOAD (KG)
			FRONT (kg)	REAR (kg)	TOT. (kg)	FRONT (kg)	REAR (kg)	
STANDARD CAPACITY								
35S11G	3450	3500	1650	2240	1995	1280	715	1505
35C11G	3450		1900	2600	2155	1335	820	1345
	3750				2165	1350	815	1335
40C11G	3450	4200		3100	2165	1335	830	2035
	3750				2175	1350	825	2025
50C11G	3450	5200		3700	2240	1375	865	2960
	3750				2260	1400	860	2940
	4350				2335	1455	880	2865
65C11G	3450	6000	2300	4650	2450	1420	1030	3550
	3750				2460	1435	1025	3540
	4350				2525	1490	1035	3475
60C11G	3450	6500		5000	2450	1420	1030	4050
	3750				2460	1435	1025	4040
	4350				2525	1490	1035	3975

Weights listed above are subject to 5% tolerance.

ENGINE DATA

- CNG stoichiometric combustion
- Multipoint sequential phased injection
- Water cooled naturally aspirated
- Number of cylinders : 4 in line
- Bore per stoke : 94,4 x 100 (mm)
- Total displacement : 2,8 (lt.)
- Compression ratio : 12,2 /1

Performance

- Max output : 78/ 106 (kW / CV)
- Max output speed : 3800 (rpm)
- Max torque : 220/ 22.4 (Nm / Kgm)
- Max torque speed : 2200 rpm

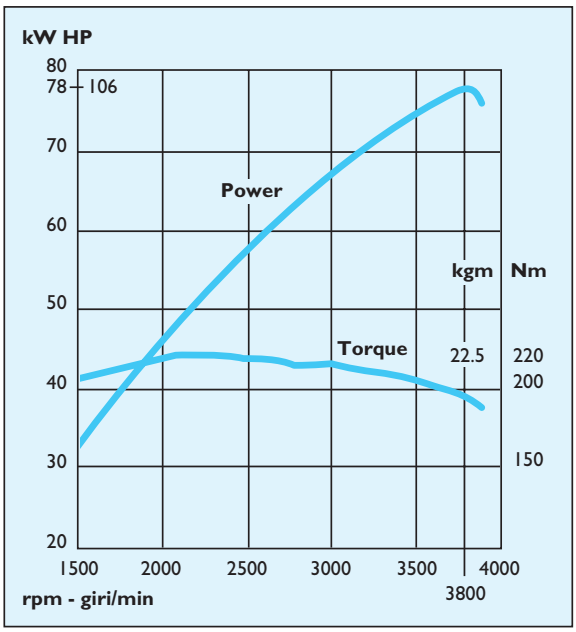

IVECO Daily CNG

Iveco Daily operators can call upon a wide range of customer service support and back-up services, including:

- *Flexible finance arrangements and cost-effective insurance terms*
- *Full vehicle warranty cover with extended protection options*
- *Contract hire facilities to suit operational requirements*
- *Assistance Non-Stop breakdown support, Europewide and on call 24 hours a day, 365 days a year*
- *Readily available parts back-up with full Vehicle Off-Road service and around the clock parts supply and technical advice.*

To find out more about the full range of Iveco Daily support services available, contact one of our dedicated dealers.

Located throughout the UK and Europe, these service centres have fully equipped workshops, advanced plug-in diagnostics, fast and accurate CD-Rom parts identification and fully trained technicians to keep your vehicles performing at their highly productive best.

Iveco UK Limited
Iveco House
Station Road
Watford WD17 1SR

Website: www.ivecofordtruck.co.uk
E-mail: lbuwatford@iveco.com